Down East Microwave Inc. 954 Route 519, Frenchtown NJ 08825
Phone: 908-996-3584 (Voice) 908-996-3702 (Fax) http://www.downeastmicrowave.com

NEW DESIGNDEM Part Number 144-28FRS***NEW DESIGN***

Low power 144 MHz Transverter for the Flex Radio System SDR-1000

Operating Specifications:

Operating Voltage:	12.0 - 15.5 VDC, 13.8 nominal
Current Drain:	Receive / Transmit 400 mA maximum
Output Power:	5 - 10 mW nominal linear
Receive Noise Figure and gain:	3.5 dB NF maximum, 5 dB gain minimum

Operational Overview

The DEM 144-28FRS is a low power, high performance 144 MHz to 28 MHz transverter design to be used in conjunction with Flex Radio System's SDR-1000 Software Defined Radio transceiver. **This transverter is not designed to be used as a stand-alone 2-meter device!** It is intended to be used as a 2nd conversion IF for microwave transverters. The 144-28FRS has a nominal linear output power of 5 - 10 mW with the 28 MHz. IF drive provided by the SDR-1000. On the receive side, a high dynamic range amplifier, a high level double balanced mixer (+17.0 dBm) and a three chamber helical filter are employed to providing a over load proof, low gain front end with superior selectivity. It is similar in design to our high performance 2 meter transverter without the GaAs FET front end. The transverter is complete with all interfacing required to install in the SDR1K-ENC enclosure and operate with the SDR-1000.

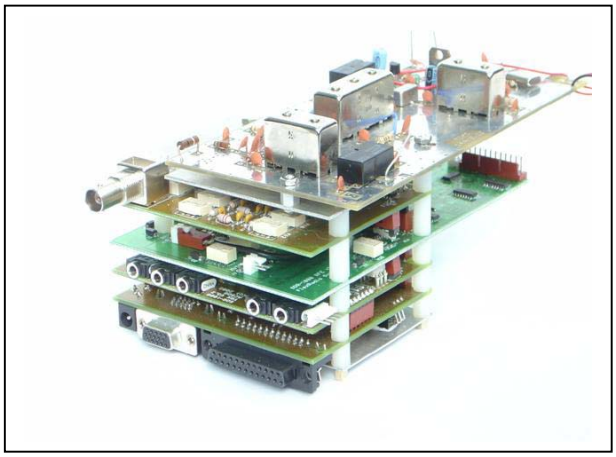

The 144-28FRS's 144 MHz input/output utilize BNC connectors (supplied in this kit) that are mounted in the existing holes in the SDR1K-ENC enclosure. The transverter also has a built in relay for external switching duties if required. It will "Shadow" the TR switch timing of the SDR-1000. The only external wiring required to operate a microwave transverter after the completion of this kit are a simple BNC cable or cables that will carry both TX and RX signals along with the keying voltage to activate the microwave transverters of choice transmit functions. It is a complete, simple to use kit and will provide the highest 2 meter to microwave transverter performance on the market today. Please read the document through at least once before assembly.

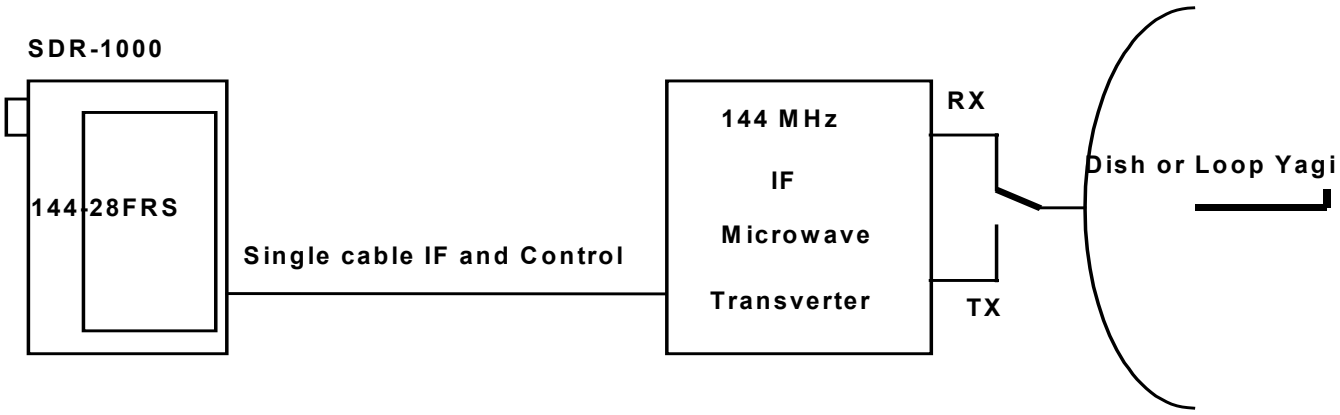

Typical setup of SDR-1000, DEM 144-28FRS and Microwave Transverter

Installing the 144-28FRS in the SDR-1000:

1. Install red #22-18 spade lugs on the red and black wires.
2. Install the two pin female connector on the end of the 8 - 9" coax to mate with J2 on the SDR-1000 RFE board (see fig. 5). The coax center conductor is pin 1 of J2.

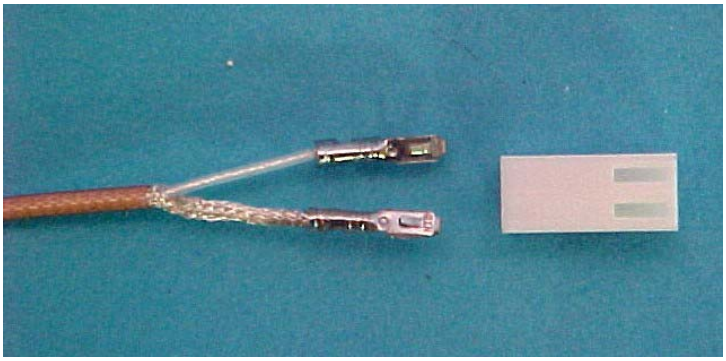

Figure 5.

3. Remove and save the four 4-40 nuts from the BPF board if performing a retrofit to and existing SDR-1000. These nuts are provided with the SDR-1000 board set.
4. Install the four 3/8 inch nylon spacers to those protruding through the top of the BPF board as seen in Figure 6 below.
5. Install the two ¼ inch aluminum spacers on the aluminum mounting plate in the two locations in Figure 7 with 4-40 the screws provided.
6. Install the mounting plate on the four spacers previously mounted on the BPF board as shown in Figure 8.
7. Screw a ¼ inch aluminum spacer into the location noted in Figure 8.
8. Connect the red wire spade lug to position B6 on the on the terminal block located in the SDR1K-ENC enclosure (see Fig. 9 and 10).
9. Connect the black wire spade lug to position B3 on the terminal block located in the SDR1K-ENC enclosure (see Fig. 9 and 10).
10. Mount the 144-28FRS on the three ¼ inch aluminum spacers using the 4-40 nuts removed from the BPF board earlier or provided with the radio.
11. Attach the connector end of the coax to the XVTR connector (J2) on the RFE board.
12. Connect the short coax or coaxes depending on the 144MHz input and output configuration to the BNC connectors labeled "RX/COM 144MHz" or "TX 144MHz" in the SDR 1000 console.

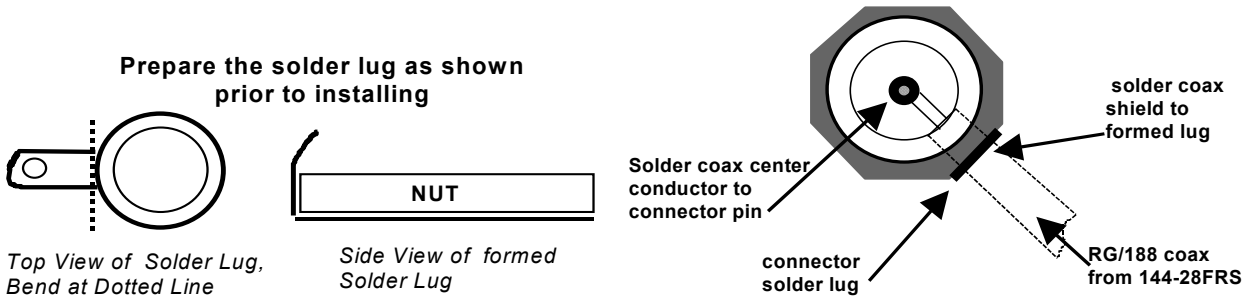

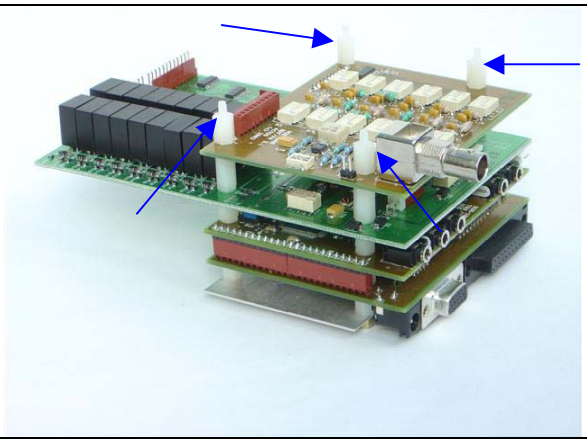

Figure 6 – Nylon spacer installation

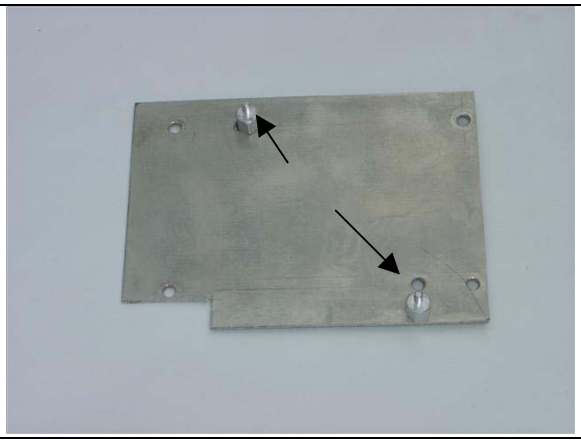

Figure 7 – Aluminum spacer installation in transverter mounting plate

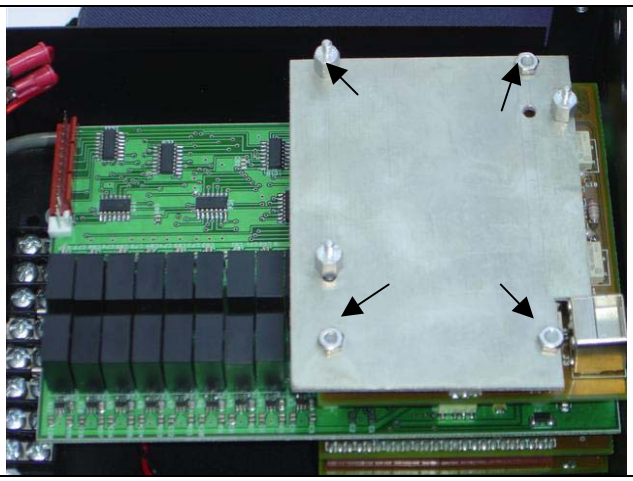

Figure 8 – Transverter mounting plate installation

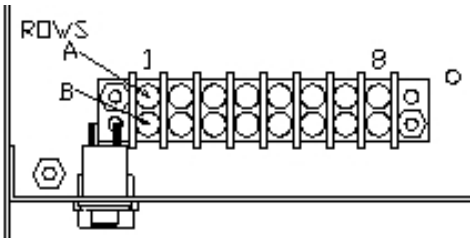

Figure 9 – SDR1K-ENC terminal strip numbering

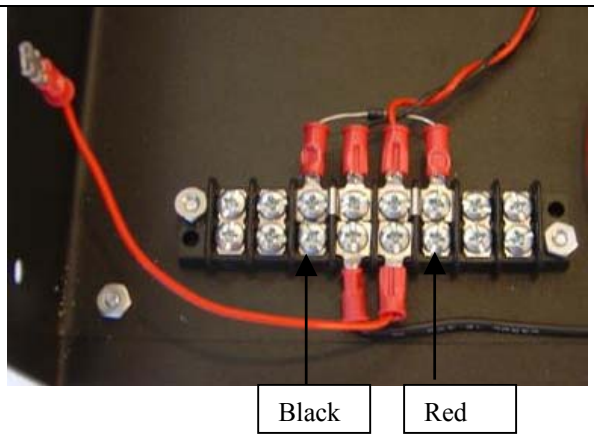

Figure 10 – SDR1K-ENC Terminal strip

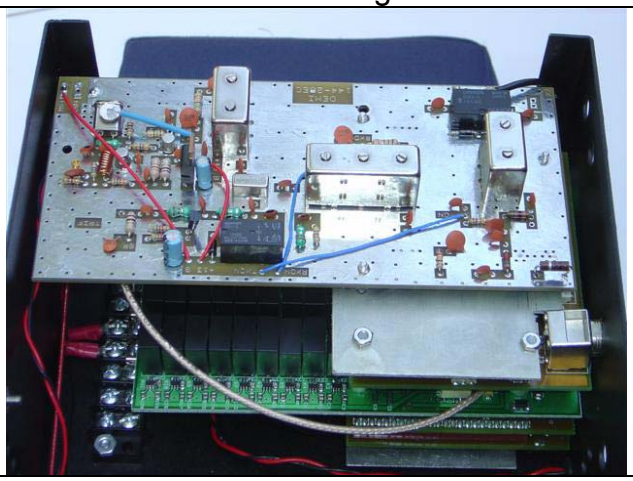

Figure 11 – Final transverter installation

Final Test:

1. Verify all test voltages listed in the electrical tests section. This section will also help if trouble shooting the 144-28FRS is required.

Electrical Test Verification:
Measurements may be made on either side of the PCB and are referenced to ground. Verify mode (RX or TX) of operation before testing.

MODE	LOCATION	VOLTAGE
RX	+13.8 by C1	Input voltage of SDR-1000 console, +13.8 VDC nominal
RX	Junction of IC3 and R18	4.8± 0.5VDC
RX	Junction of IC1 and R9	5.0± ..5VDC
RX	Junction of VR1 and C10	9.0 ± 0.5VDC
RX	TP1	0.7 to 1.7 VDC

Oscillator Testing:

If TP1 is within specification, the test points below may be skipped. The Oscillator voltage checklist specifies a properly adjusted oscillator. You may verify if desired and use for trouble shooting an inoperative Local Oscillator.

MODE	LOCATION	VOLTAGE
RX	Junction of Q2 and C8	9 ± 0.5VDC
RX	Junction of Q2 and R4	2.0± 0.5VDC
RX	Junction of Q2 and R6	1.5 ± 0.5VDC
RX	Junction of Q3 and R6	1.5± 0.5VDC
RX	Junction of Q3 and C9	9.0 ± 0.5VDC

Transmit Testing:

RF drive is not required for this test. Place the SDR-100 transceiver into the Transmit mode and verify. Do not modulate or close CW key. This is a non-RF test. If RF is emitted, voltages will vary from tolerance specified.

MODE	LOCATION	VOLTAGE
TX	Junction of IC2 and R17	4.8 ± 0.5VDC

2. Enable the transverter on the Setup Options>General tab in the SDR Console.
3. Verify that the RX section by using a signal generator or an on air 2M signals. Remember that the converter has unity gain at best so additional RX noise from a 2M antennae will not be noticed.
4. Function the TX circuit and verify output power between 5 and 10 mW. Most microwave transverters will operate at less than 5 mW of drive so adjustment is not crucial.
5. Adjust frequency after warm up but is best to do after 24 hours of operating time.
6. Consult all SDR-1000 functions for operation.
7. You are now ready for operation.

Options to use or not:

You may use any of the auxiliary connections of the K1 relay. They are isolated contacts and can be used to key any normal voltage and up to 3 Amps of current. They may be used for anything you desire such as mirroring the PTT control for the microwave transverter to isolate it from the SDR-1000 keying circuit, keying external power amplifiers or receive pre-amplifiers. You also have the option of sending a PTT signal through the 144 MHz. RF coaxial connections to key a microwave transverter by installing L10. Please refer to the component placement diagram and the supplied schematic for all optional connections.

Cautions:

If you use the mirrored PTT signal on the IF coax, (the installation of L10) be sure that the DC power supply is disconnected or powered down while hooking up the interconnecting cables and install a fuse between the 144-28FRS and the terminal block. Also, check all of the external interfacing cables from the SDR-1000/144-28FRS to the microwave transverter for shorts or opens. Be sure the microwave transverter is configured correctly before connecting.

Conclusion:

We believe the 144-28FRS and the SDR-1000 transceiver will make one of the best possible Microwave IF transceiver combinations in the world. The addition of the 144-28FRS is a pure extension of the SDR-1000's functions and versatility on the microwave bands. This is the second revision of this transverter's design. Changes have been made to aid easy implementation of add on LNA's and Power amplifiers for standard 2-meter use.

DEM 144-28FRS Component List

Resistors (R) values are in Ohms and are ¼W unless otherwise specified. CC = Carbon

R1 5.1K	R5 1.5K	R9 56 1/2W	R18 56 1/2W CC
R2 5.1K	R6 47	R10 47	R19 56 1/2W
R3 470	R7 100	R14 56 1/2W	
R4 560	R8 150	R17 56 1/2W CC	

All capacitors are disc and are in pF unless otherwise specified. "E" = Tantalum Electrolytic

C1 100 μF "E"	C8 1000	C15 120	C24 120	C31 120
C2 1000	C9 1000	C16 1000	C26 1000	C32 120
C3 0.1μF	C10 2.2μF "E"	C17 39	C27 120	C33 0.1μF
C4 1-8 piston	C11 0.1μF	C18 18	C28 0.1μF	C34 0.1μF
C5 1000	C12 1000	C19 120	C29A 120	C35 1000
C6 15	C13 0.1μF	C20 1000	C29B 120	
C7 39	C14 120	C21 120	C30 1000	

All molded chokes have GOLD and SILVER multiplier and tolerance bands. Please identify desired value by the significant color band combination.

L1 7 turns #24 1/8" dia. Enamel	L6 0.33μH (Orange/Orange)
L2 1.0 μH (Brown/Black)	L7 0.22μH (Red/Red)
L3 0.33 μH (Orange/Orange) Small	L8 1.0 μH (Brown/Black)
L4 1.0 μH (Brown/Black)	L10 1.0 μH (Brown/Black)
L5 0.22μH (Red/Red)	

Solid State, Relays and Filter Components

CR1 1N4000 Type	IC2 GALI 74	Q2 2N5179
CR2 1N4000	IC3 GALI 74	Q3 2N5179
F1 TOKO 1153	K1 G5V-12	VR1 78S09
F2 TOKO 1119D	K2 G6Y	PTC-50
F3 TOKO 1159	M1 TUF-1H	Y1 Crystal 116 MHz
IC1 ERA 5	Q1 PN2222	PC Board

Hardware and PCB installation Components

2- Red spade lugs	3 - 1/4" hex standoff
2- BNC connectors and hardware	3- 4-40 x 1/4" screw
3- #4 lock washer	4- 4-40 x 3/8 nylon spacers
1- connector housing	Mounting plate
2- female pins	

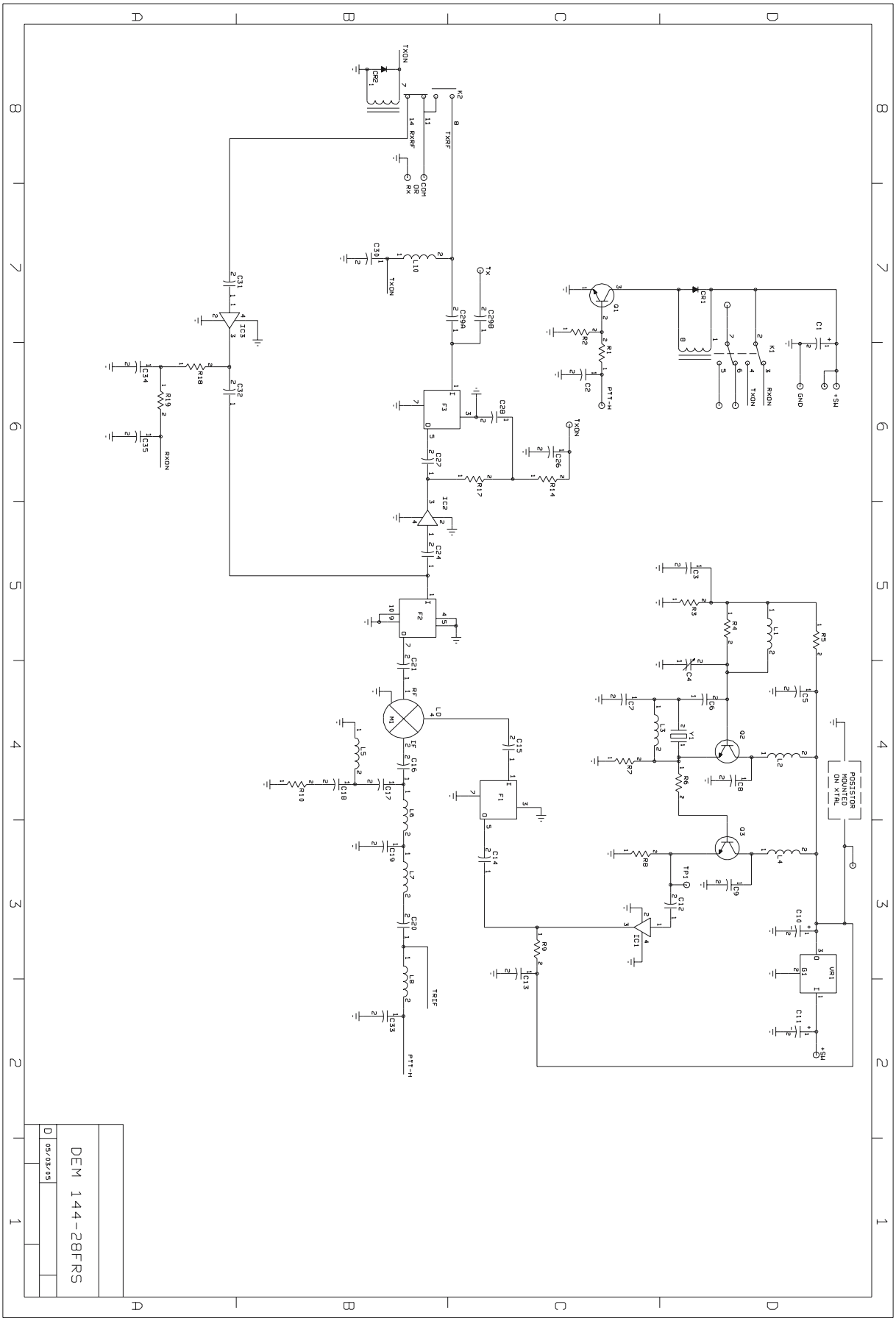
DEM 144-28FRS
D
05/03/05
POSISTOR MOUNTED ON XTAL
TXON
RXON
TXRF
RXRF
COM OR RX
PTT-H
TRXF
+SW
GND
Tx
Q1
Q2
Q3
K1
K2
CR1
CR2
F1
F2
F3
IC1
IC2
IC3
M1
Y1
VR1
TP1

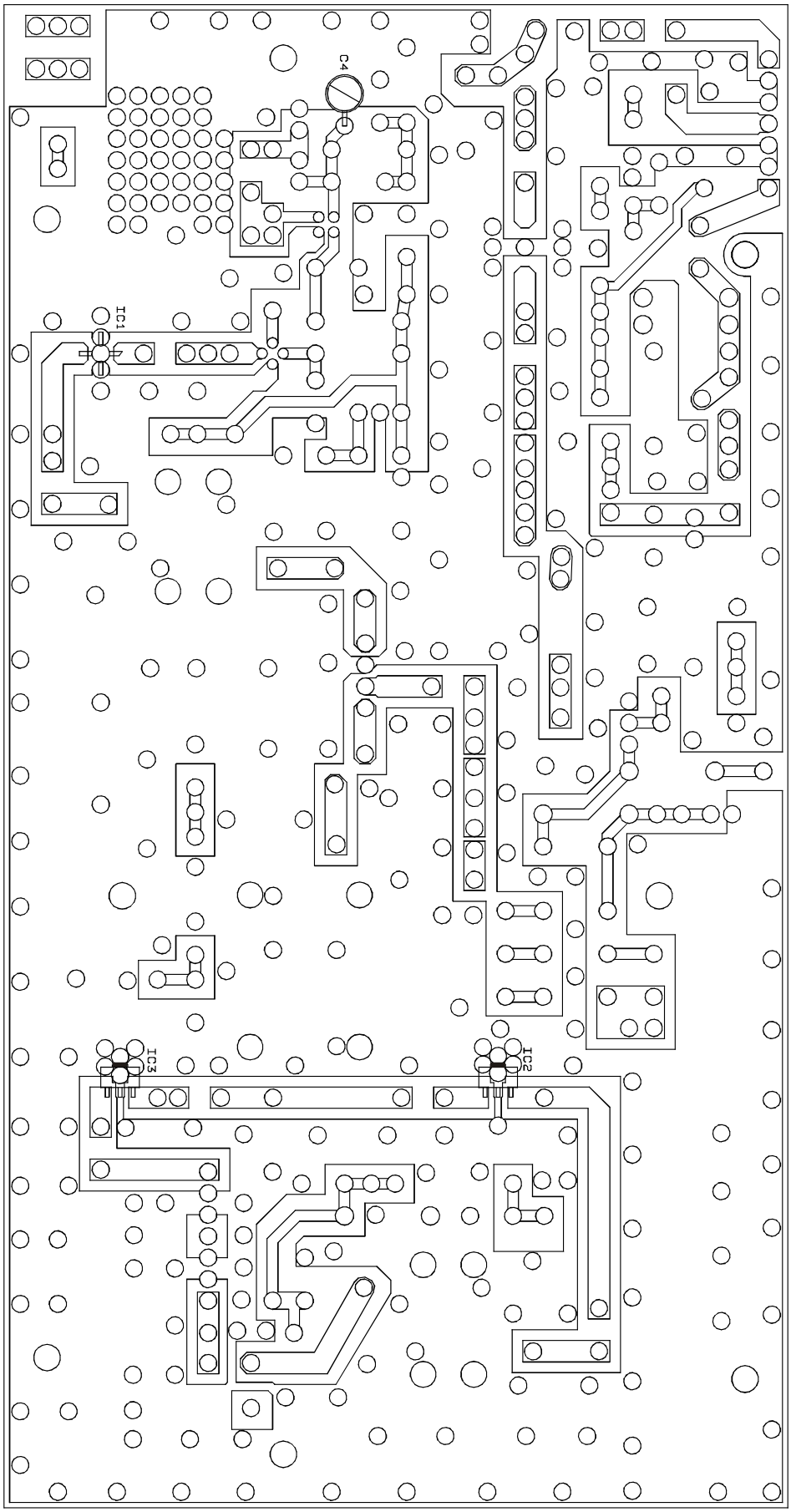

144-28FRS
BOTTOM SIDE ASSEMBLY
05/03/2005

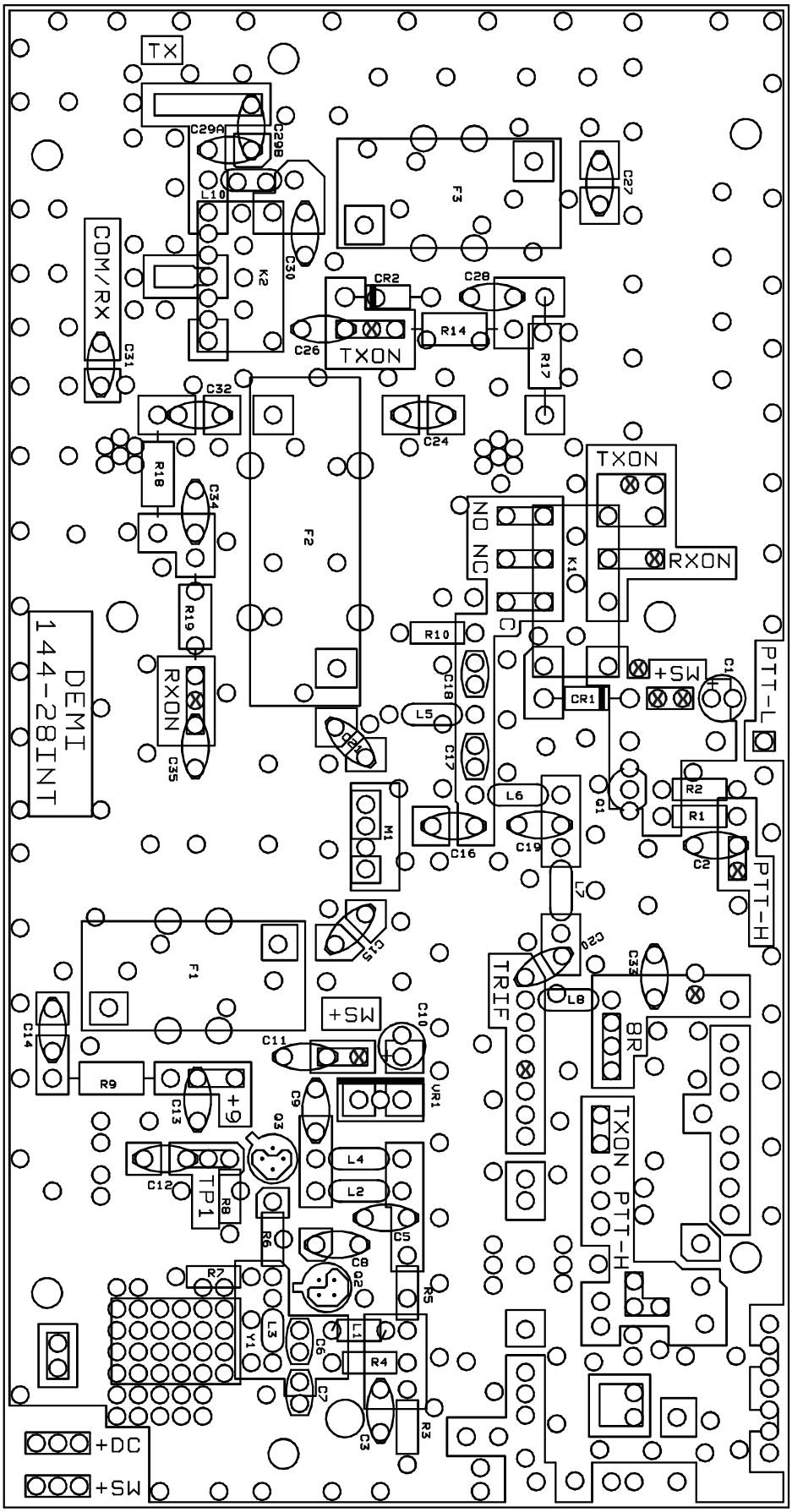

144-28FRS
TOP SIDE ASSEMBLY
05/03/2005